SIEMENS

ACVATIX™

Electromotoric actuators for valves

SAX..

Actuators with 20 mm stroke and 800 N force

- SAX31.. Operating voltage AC 230 V, 3-position control signal
- SAX61.. Operating voltage AC/DC 24 V, positioning signal 0...10V, 4...20 mA
  With position feedback, forced control, characteristic changeover
- SAX61../MO operating voltage AC/DC 24 V,
  RS-485 for Modbus RTU communication
- SAX81.. Operating voltage AC/DC 24 V, 3-position control signal
- For direct mounting on valves; no adjustments required
- Manual adjuster, position and status indication (LED)
- Optional functions with auxiliary switches, potentiometer, function module, stem heating

Application

Electromotive actuators to operate Siemens 2-port and 3-port valves, types V..F21.., V..F22.., V..F31.., V..F32.., V..F40.., V..F41.., V..F42.., V..F52.., and V..F53.. with 20 mm stroke as control and safety shut-off valves in heating, ventilation and air conditioning systems.

Features

Function	Description	Type
3-position control	A 3-position signal controls the actuator via connection terminals Y1 or Y2. The desired position is transmitted to the valve.	SAX31.., SAX81..
Modulating control	The positioning signal range (DC 0...10 V / DC 4...20 mA / 0...1000 Ω) corresponds to the positioning range (closed...open, or 0…100% stroke) in a linear manner.	SAX61..
Positioning signal and characteristic changeover	Setting with DIL switch. Factory setting: ● Characteristic curve: log = Equal percentage (switch set to Off) ● Positioning signal: DC 0...10 V (switch set to Off)	
Position feedback U	Signal returned to acquire the position via input.	SAX61.., SAX61../MO
Forced control (Z-mode)	Forced control helps override automatic mode and is implemented via higher control.	
Calibration	Carry out during initial commissioning. The actuator drives to the top or bottom end position; the measured values are saved.	
Valve seat detection	The actuators have power-dependent seat detection. After calibration, the exact valve stroke is stored in the actuator's memory.	
Foreign body detection	After clogging is detected, three attempts are made to get past clogging. If unsuccessful, the actuator continues to follow the positioning signal only within a limited range, and the LED flashes red.	
Modbus RTU (RS-485), not galvanically isolated	Setpoint 0...100 % valve setting Actual value 0..100% for valve position Override control Open / Close / Min / Max / Stop Setpoint monitoring and backup mode	SAX61../MO

Type summary

Type	Item NO.	Stroke	Positioning force	Operating voltage	Positioning signal	Spring return time	Positioning time	LED	Manual adjustment [3]	Comment
SAX31.00 [1]	S55150-A105	20 mm	800 N	AC 230 V	3-pos.	-	120 s	-	Push and fix	-
SAX31.03 [1]	S55150-A106						30 s			
SAX61.03 [2]	S55150-A100			AC 24 V DC 24 V	DC ...10 V DC 4...20 mA 0...1000 Ω			yes		[4]
SAX61.03U [2]	S55150-A100-A100									
SAX61.03/MO [2]	S55150-A140				Modbus RTU					[5]
SAX81.00 [2]	S55150-A102				3-pos.		120 s	-		-
SAX81.03 [2]	S55150-A103						30 s			
SAX81.03U [2]	S55150-A103-A100									

[1] Approbation: CE

[2] Approvals: CE, UL

[3] Not designed for continuous operation.

[4] Position feedback, forced control, characteristic changeover

[5] Position feedback, forced control

Scope of delivery

Actuators, valves and accessories are supplied in individual packs.

Accessories / spare parts

Electrical accessories

Type	Auxiliary switch ASC10.51	Potentiometer ASZ7.5	Function module AZX61.1	Stem heating element ASZ6.6
Item NO.	S55845-Z103	S55845-Z106	S55845-Z107	S55845-Z108
	Max. 2			Max. 1
SAX31..	Max. 2	Max. 1	-	
SAX61..		-	Max. 1	
SAX61../MO		-		
SAX81..		Max. 1	-	

Mechanical accessory

Type	Weather shield ASK39.1
Item NO.	S55845-Z109

Ordering (example)

Type	Order number	Designation	Number of pieces
SAX81.03	S55150-A103	Actuator	1
ASZ7.5	S55845-Z106	Potentiometer	1

Spare parts

Product no. / SSN		
8000060843	**Housing cover**	**Screw (valve stem coupling)**
	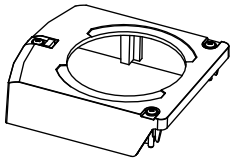	
		U-bracket
		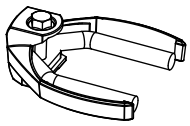

Device combinations

2-port valves VV.. (control or safety shutoff valves)

Valve type		DN	PN class	k_{vs} [m³/h]	Data sheet
VVF21..	Flange	25...80	6	1.9...100	N4310
VVF22..				2.5...100	N4401
VVF31..		15...80	10		N4320
VVF32..				1.6...100	N4402
VVF40..			16	1.9...100	N4330
VVF41..		50		19 / 31	N4340
VVG41..	Connecting thread	15...50		0.63...40	N4363
VVF42..	Flange	15...80		1.6...100	N4403
VVF42..K		50...80		40...100	
VVF52..		15...40	25	0.16...25	N4373
VVF53..		15...50		0.16...40	N4405

3-port valves VX.. (Control valves for functions "mixing" and "distribution")

Valve type		DN	PN class	k_{vs} [m^3/h]	Data sheet
VXF21..	Flange	25...80	6	1.9...100	N4410
VXF22..				2.5...100	N4401
VXF31..		15...80	10		N4420
VXF32..				1.6...100	N4402
VXF40..			16	1.9...100	N4430
VXF41..		15...80		1.9...31	N4440
VXG41..	Connecting thread	15...50		1.6...40	N4463
VXF42..	Flange	15...80		1.6...100	N4403
VXF53..		15...50	25	1.6...40	N4405

Product documentation

Title	Contents	Document ID
Actuators SAX.., SAY.., SAV.., SAL.. for valves	Basic documentation: Detailed information on stroke actuators including Modbus types Stroke actuators for valves with 15/20/40 mm stroke and rotary actuators for butterfly valves	CE1P4040en
Electromotive actuators for valves SA.., Modbus RTU	Datasheet: Modbus communication profiles	A6V101037195
Mounting instructions G..161../MO and S..6/MO	Mounting instructions: Mounting and installation instructions for Modbus actuators	A5W00027551
Valve Actuator DIL Switch characteristic overview	Commissioning / configuration: Depictions, description of actuator, and valve characteristics by DIL switch setting [English]	A6V12050595

Related documents such as the environmental declarations, declarations of conformity, etc., can be downloaded from the following Internet address:

www.siemens.com/bt/download

Notes

Safety

⚠ CAUTION

National safety regulations

Failure to comply with national safety regulations may result in personal injury and property damage.

- Observe national provisions and comply with the appropriate safety regulations.

⚠ WARNING	
	Risk of burns from hot actuator brackets The actuator brackets on heating plants can also become hot from the contact with the hot valve during operation. The temperature of the actuator bracket can reach 100 °C. When servicing the actuator: ● Switch off both pump and operating voltage. ● Close the main shutoff valve in the piping. ● Allow the piping to cool off.

Engineering

SAX31.. / SAX81..

3-position actuators must be controlled by a controller, see Internal diagrams [▶ 14].

SAX61..

Up to 10 actuators can drive in parallel on a controller output with a rating of 1 mA. Modulating actuators have an input impedance of 100 kΩ.

SAX61../MO

The Modbus converter is designed for analog control at 0...10 V.

Keep the analog signal setting on the actuator as is (switch 1 to OFF); adjustment not permitted.

The actuators are factory configured for equal-percentage characteristic.

DIL switch (internal actuator characteristic changeover) to "log" (switch 2 to "OFF").

ASZ7.5

Actuators with a DC 0...9.8 V feedback signal are recommended for the combination SIMATIC S5/S7 and position feedback.

Signal peaks in potentiometer ASZ7.5 may result in error messages on Siemens SIMATIC. This is not the cause, however, when combined with Siemens HVAC controllers. The reason is the higher resolution and faster reaction time on SIMATIC.

Use the potentiometer as voltage divider on the 3-wire connection. Powering the potentiometer over the wiper may shorten the life cycle of the potentiometer. Signal peaks increase in frequency and scope over the lifespan in this operating mode.

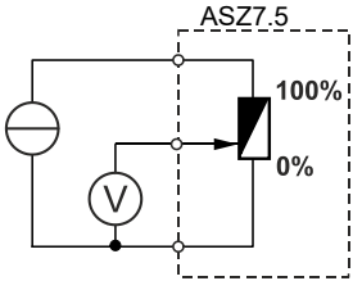

Mounting

Mounting positions

Indoor application	Outdoor application [1] [2]
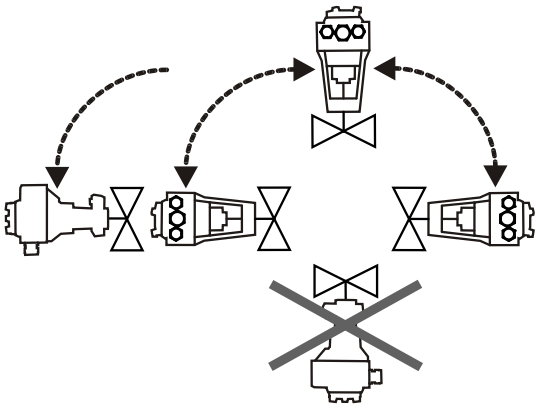	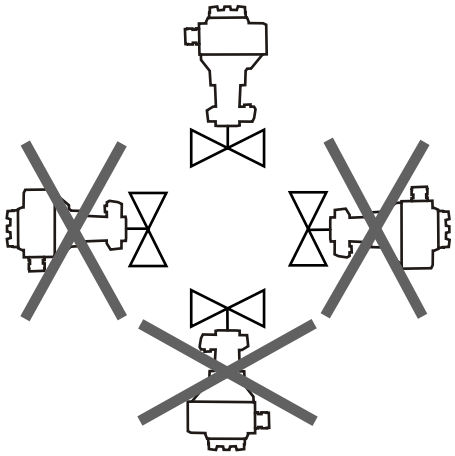

[1] Requires weather shield ASK39.1 Housing protection class remains IP 54.

[2] SAX61../MO is not intended for outdoor use.

Maintenance

The actuators are maintenance-free.

Disposal

	This symbol or any other national label indicate that the product, its packaging, and, where applicable, any batteries may not be disposed of as domestic waste. Delete all personal data and dispose of the item(s) at separate collection and recycling facilities in accordance with local and national legislation. For additional details, refer to Siemens information on disposal.

Warranty

The application-specific technical data is guaranteed only in combination with the Siemens products listed in the 'Device combinations' section. If third-party products are used, any guarantee provided by Siemens will be invalidated.

Technical data

Power supply		
Operating voltage	SAX31..	AC 230 V ± 15 %
	SAX61..	AC 24 V ± 20 % / DC 24 V + 20 % / - 15 % (SELV / PELV)
	SAX81..	
External supply line fusing (EU)		• Non-renewable fuse 6...10 A slow • Circuit break max. 13 A, tripping characteristic B, C, D to EN 60898 • Power source with current limitation of max. 10 A
Fusing per DIN 57100 part 430 (supply line)		6...10 A slow
Typical switch-on current [1)] (3-position actuators)	SAX31..	2.3A
	SAX81..	4.5A

Functional data		
Positioning time for nominal stroke	The positioning time may vary depending on the type of valve (Type summary [▶ 3])	
	SAX31.00, SAX81.00	120 s
	SAX31.03, SAX61.03.., SAX81.03..	30 s
Positioning force		800 N
Nominal stroke		20 mm
Working stroke range at which the actuator is calibrated		8...23 mm
Permissible media temperature (valve fitted)		-25...130 °C

Signal inputs		
Positioning signal "Y"	SAX31.., SAX81..	3-pos.
	SAX31.. Voltage	AC 230 V ± 15 %
	SAX81.. Voltage	AC 24 V ± 20% / DC 24 V + 20% / - 15%
	SAX61.. (DC 0...10 V) current draw	≤ 0.1 mA
	Input impedance	≥100 kΩ
	SAX61.. (DC 4…20 mA) current draw	DC 4...20 mA ± 1%
	Input impedance	≤ 500 Ω

Power consumption at 50 Hz					
Type	**Item NO.**	**Operating [W]**	**Operating [VA]**	**Standby [W]**	**Standby [VA]**
SAX31.00	S55150-A105	2.2	3.9	1.3	2.2
SAX31.03	S55150-A106	4.6	7.9	1.3	2.2
SAX61.03	S55150-A100	2.5	6.3	1.7	4.6
SAX61.03U	S55150-A100-A100	2.5	6.3	1.7	4.6
SAX61.03/MO	S55150-A140	3.0	7.0	2.2	6.0
SAX81.00	S55150-A102	2.3	4.0	1.5	2.7
SAX81.03	S55150-A103	4.3	7.2	1.5	2.6
SAX81.03U	S55150-A103-A100	4.3	7.2	1.5	2.6

Communication SAX61../MO		
Communication protocol	Modbus RTU	RS-485, not galvanically isolated
	Number of nodes	Max. 32
	Address range	1...245 / 255
	Factory setting	255
	Transmission formats	1-8-E-1 / 1-8-O-1 / 1-8-N-1 / 1-8-N-2
	Factory setting	1-8-E-1
	Baud rates (kbaud)	Auto / 9.6 / 19.2 / 38.4 / 57.6 / 76.8 / 115.2
	Factory setting	Auto
	Bus termination	120 Ω electronically switchable
	Factory setting	Off

Parallel connection	
SAX61..	≤ 10 (depending on controller output)

Forced control		
Z positioning signal	SAX61..	R = 0...1000 Ω, G, G0
	R = 0...1000 Ω	Stroke proportional to R
	Z connected to G	Max. stroke 100 % [2)]
	Z connected to G0	Max. stroke 0 % [2)]
	Voltage	Max. AC 24 V ± 20 %
		Max. DC 24 V + 20 % / - 15 %
	Power consumption	≤ 0.1 mA

Position feedback		
U	Voltage range SAX61..	0...10 V DC
	Load impedance	> 10 kΩ resistive
	Load	Max. 1 mA

Connection cable		
Wire cross-sectional areas		0.13...1.5 mm ^{2}, AWG 24...16 [3)]
Cable entries	SAX.. (EU)	2 entries ø 20.5 mm (for M20) 1 entry ø 25.5 mm (for M25)
	SAX..U (US)	3 entries ø 21.5 mm for ½" tube connection
	SAX61../MO	Fixed connection cable 0.9m
		Number of cores 5 x 0.75 mm ^{2}

Degree of protection and class		
Housing from vertical to horizontal		IP 54 as per EN 60529 [4)]
Device protective class per EN 60730-1	SAX31.. AC 230 V	II
	SAX61.. AC / DC 24 V	III
	SAX81.. AC / DC 24 V	

Environmental conditions		
Operation per IEC 60721-3-3	Climatic conditions	Class 3K5
	Mounting location	Indoors (weather-protected) [4)]
	Temperature, general	-5...<55 °C
	Humidity (non-condensing)	5...95 % r.h.
Transport per IEC 60721-3-2	Climatic conditions	Class 2K3
	Temperature	-25...70 °C
	Humidity	5...95 % r.h.
Storage per IEC 60721-3-1	Climatic conditions	Class 1K3
	Temperature	-15...55 °C
	Humidity	5...95 % r.h.
Max. media temperature when mounted on valve		130 °C

Directives and standards	
Product standard	EN 60730-x
Electromagnetic compatibility (field of use)	For residential, commercial, and industrial environments
EU conformity (CE)	See EU declaration of conformity CE1T4501X1 [5)]

Directives and standards		
UK conformity (UKCA)		See UK declaration of conformity A5W00185581A-001 [5]
RCM compliance		See RCM declaration of conformity CE1T4515X4 [5]
EAC compliance		Eurasian compliance for all SAX..
UL, cUL	AC 230 V	-
	AC / DC 24 V	UL 873 http://ul.com/database file number E35198

Environmental compatibility
Product environmental declarations 71 7331 0559 [5] und A6V101083254 [5] include data on environmentally friendly product design and testing (RoHS compliance, material composition, packaging, environmental benefits, disposal).

Dimensions
See Dimensions [▶ 17]

Accessories		
Potentiometer ASZ7.5 [6] 0...1000 Ω ± 5 %	Voltage	DC 10 V
	Current rating	<4 mA
Auxiliary switch ASC10.51 [6]	Switching capacity	AC 24…230 V, 6 (2) A, potential free
External fusing of supply line		• Non-renewable fuse 6...10 A slow • Circuit break max. 13 A, tripping characteristic B, C, D to EN 60898 • Power source with current limitation of max. 10 A
US installation, UL & cUL		AC 24 V class 2, 5 A general purpose
Stem heating element ASZ6.6	Operating voltage	AC / DC 24 V ± 20 %
	Power draw	50 VA, 30 W
	Switch-on current (cold)	Max. 8.5 A (max. temperature 85 °C/185 F)

[1] Switching time for RMS value of the sine wave at nominal voltage

[2] Observe acting direction of DIL switches

[3] AWG = American wire gauge

[4] For outdoor operation, always use weather shield ASK39.1, housing protection class IP 54 remains as is. SAX61../MO is not intended for outdoor use.

[5] Documents can be downloaded at http://siemens.com/bt/download.

[6] UL-approved components

Internal diagrams

SAX31..	Accessories		
	B	and/or	A
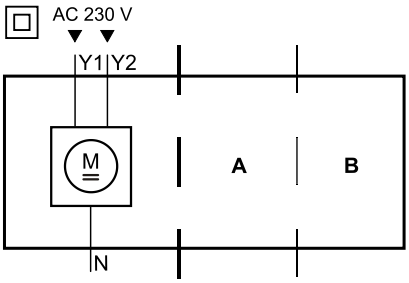	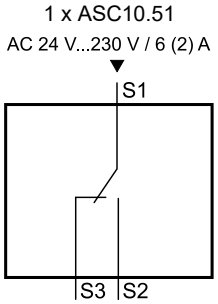	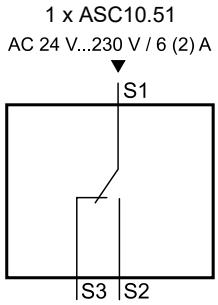 or 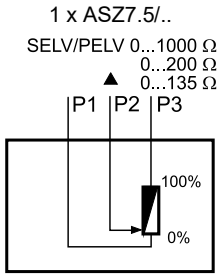

SAX61..	Accessories		
	B	and/or	A
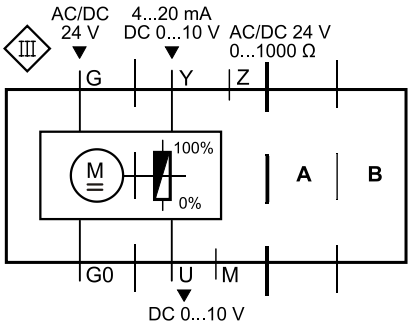	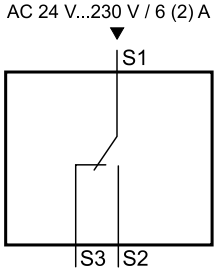	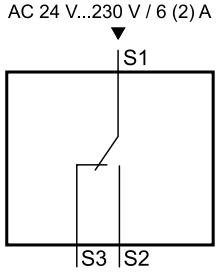
SAX61../MO 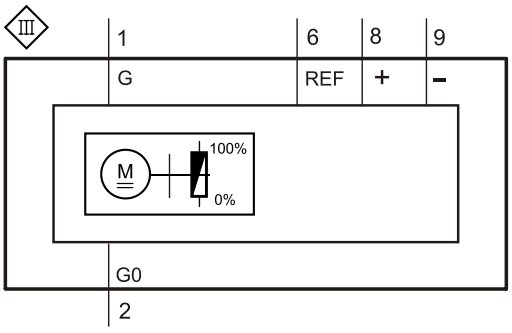			

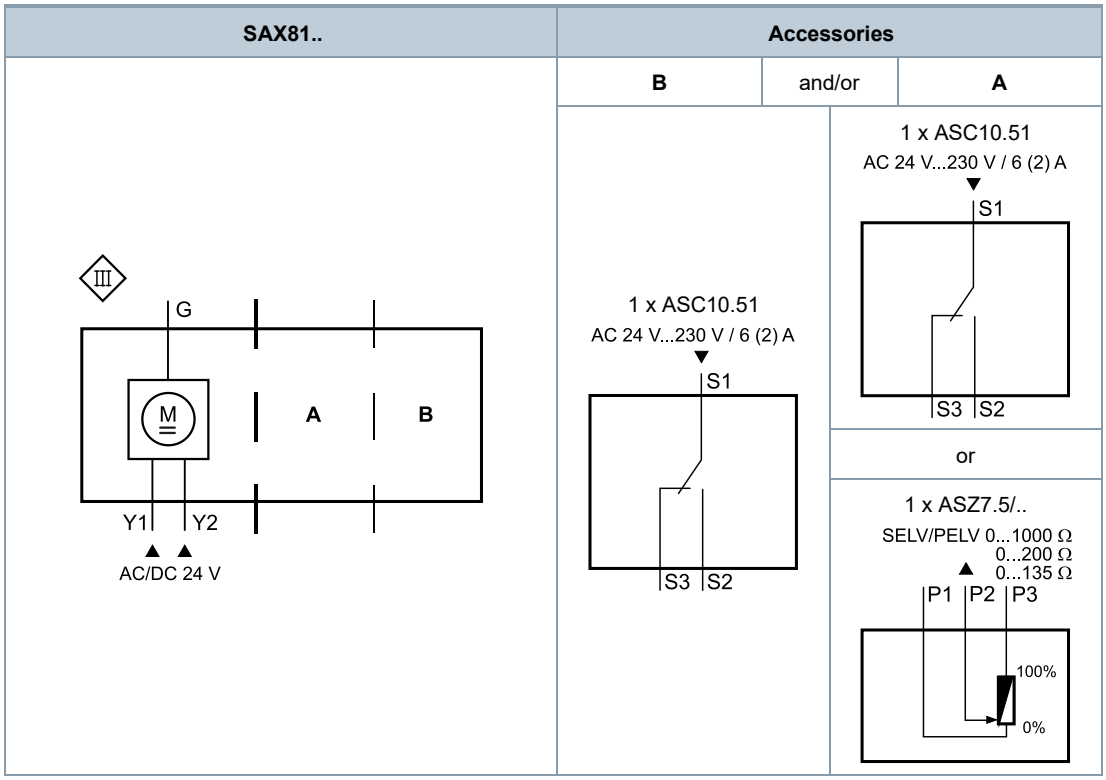

Connection terminals

SAX31..

	AC 230 V	3-pos.
N	System neutral (SN)	
Y1	Positioning signal (actuator's stem extends)	
Y2	Positioning signal (actuator's stem retracts)	

SAX61..

	AC / DC 24 V	DC 0...10 V 4...20 mA 0...1000 Ω
G0	System neutral (SN)	
G	System potential (SP)	
Y	Positioning signal for DC 0...10 V / 4...20 mA	
M	Measuring neutral	
U	Position feedback DC 0…10 V - (System neutral is measuring ground M)	
Z	Control signal forced control	

SAX61../MO

	AC / DC 24 V	Modbus RTU connecting cable
G0	System neutral (SN)	black
G	System potential (SP) AC 24 V / DC 24 V	red
REF	Reference line (Modbus RTU)	purple
+	Bus + (Modbus RTU)	gray
-	Bus - (Modbus RTU)	pink

SAX81..

	AC / DC 24 V	3-pos.
G	System potential (SP)	
Y1	Positioning signal (actuator’s stem extends)	
Y2	Positioning signal (actuator’s stem retracts)	

Internal diagrams

SAX31..

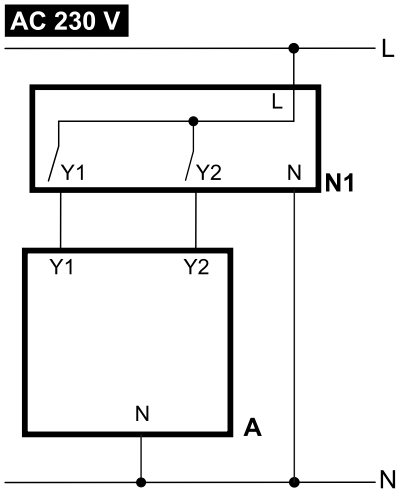

A	Actuator
L	Phase
N	Neutral
N1	Controller
Y1, Y2	Positioning signals

SAX61..

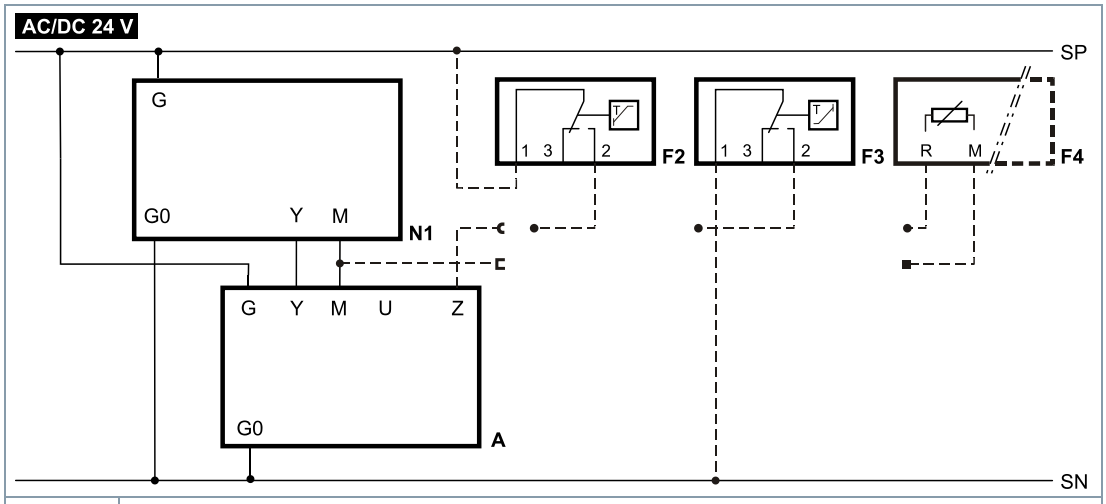

A	Actuator
F2	Frost protection thermostat: terminals: 1 – 2 frost hazard / sensor is interrupted (thermostat closes with frost) 1 – 3 normal operation
F3	Thermal reset limit thermostat
F4	Frost protection monitor with 0…1000 Ω signal output, does **NOT** support QAF21.. or QAQ61..
M	Measuring neutral
N1	Controller
SN	System zero
SP	System potential AC/DC 24 V
U	Position feedback - (System neutral is measuring ground M)
Y	Positioning signal
Z	Control signal forced control

SAX61../MO

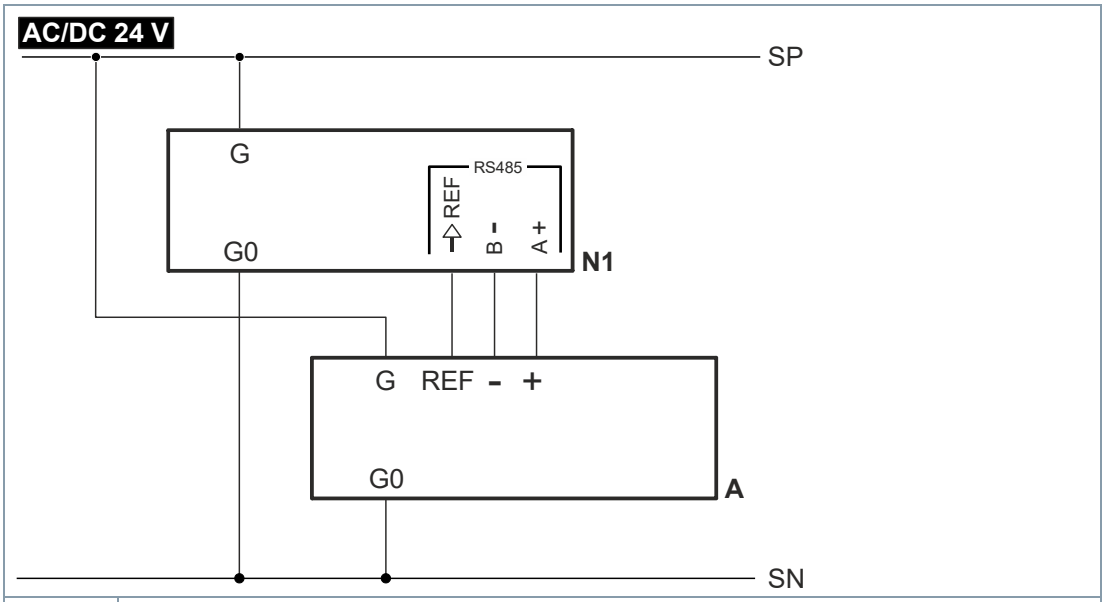

A	Actuator
N1	Controller
SP / G	System potential AC/DC 24 V
SN / G0	System neutral
REF	Reference line (Modbus RTU)
+	Bus + (Modbus RTU)
-	Bus - (Modbus RTU)

SAX81..

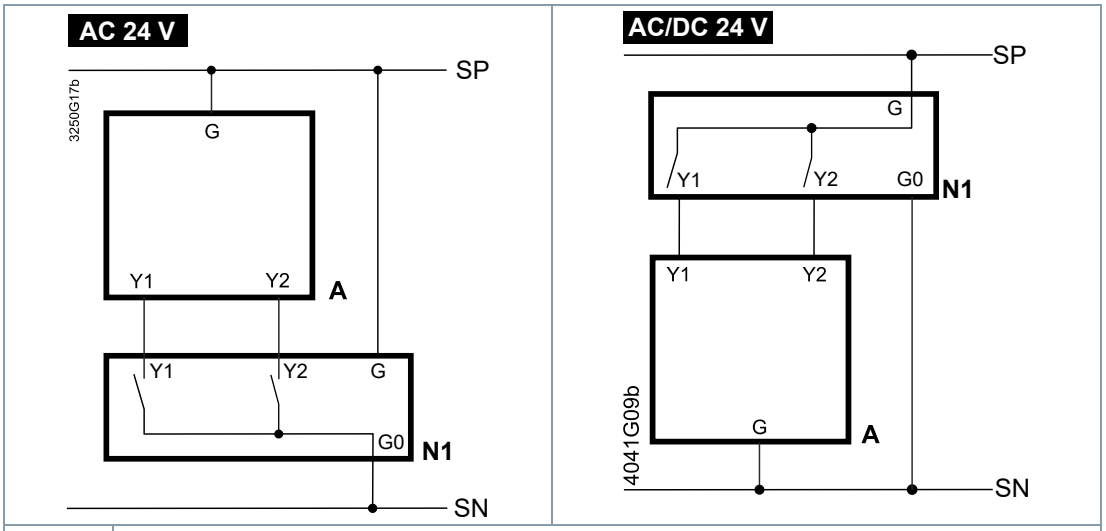

A	Actuator
N1	Controller
SN	System neutral
SP	System potential
Y1, Y2	Positioning signals

Actuator

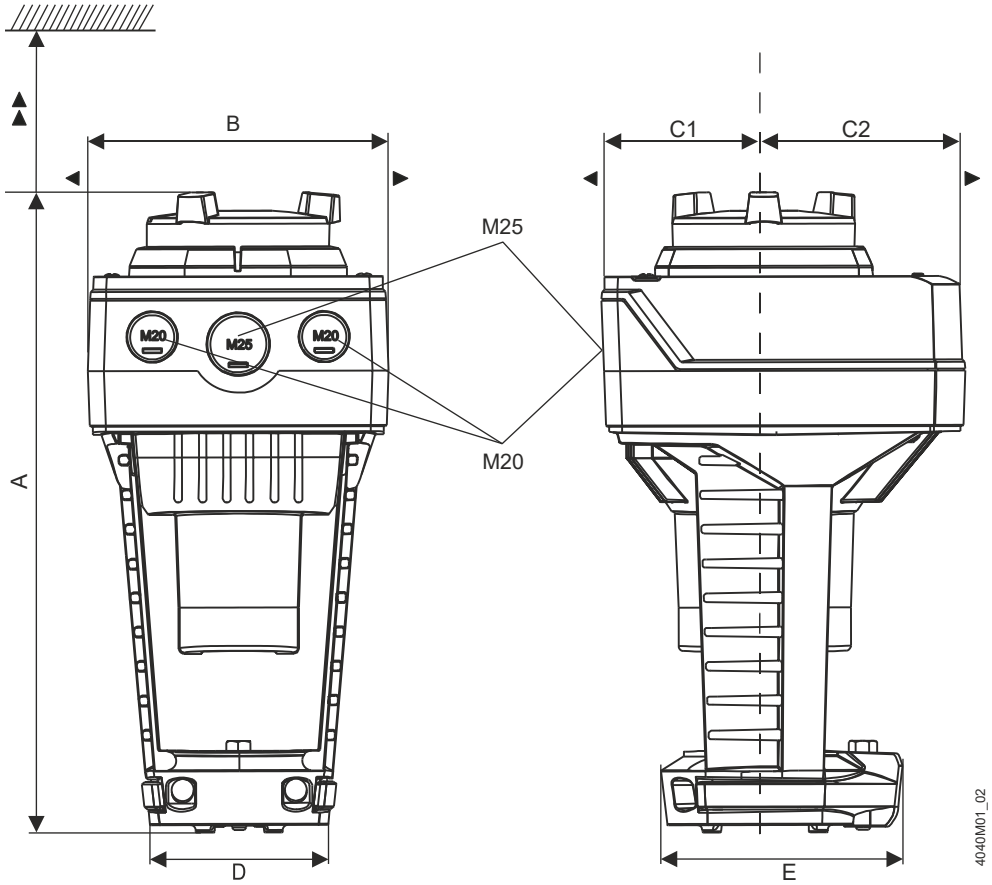

Type	A	B	C	C1	C2	D	E	►	►►	kg
	[mm]									[kg]
SAX..(U [1])	242	124	150	68	82	80	100	100	200	1.780
SAX61../MO [2]										1.930
With ASK39.1 (SAX..U [1])	267	154	300	200	100	-				2.010

[1] SAX..U: For ½" tube connections (ø 21.5 mm) – 1,850 kg / 2,080 kg with ASK39.1

[2] Device has fixed connection cable – left cable entry occupied

External Modbus converter

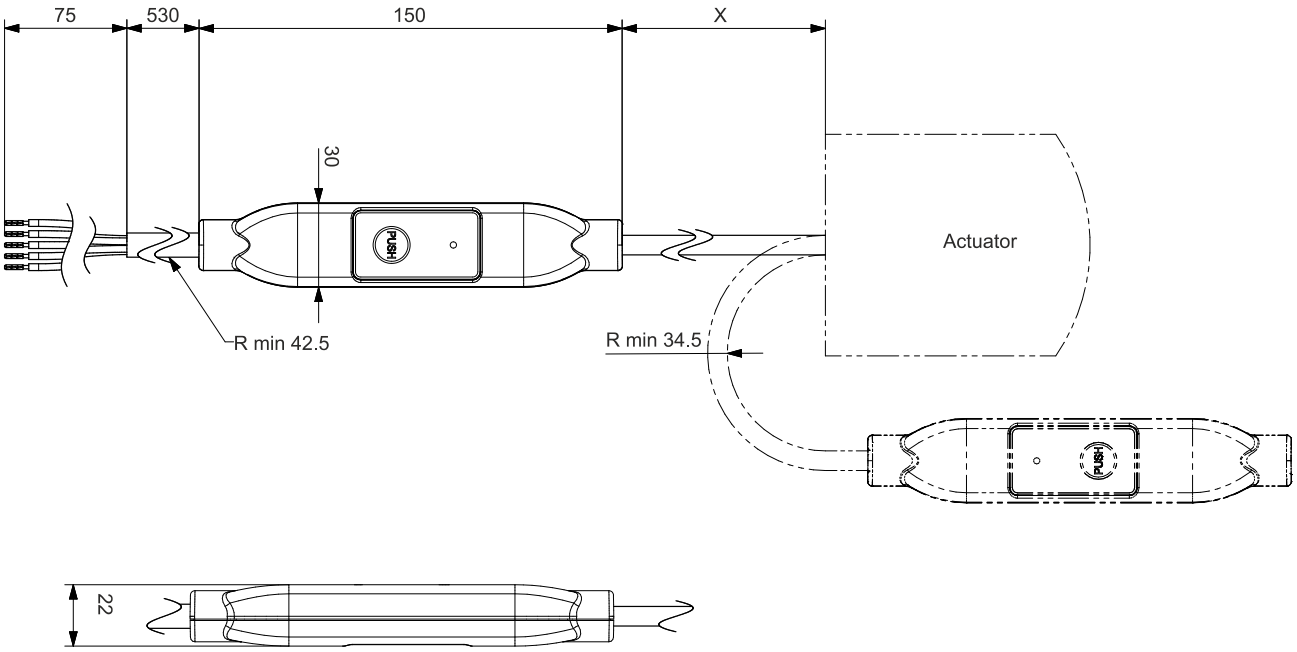

Dimensions in mm

Type	X	kg
	[mm]	[kg]
SAX61../MO	250	0.15 [1]

[1] Included in total weight.

Revision numbers

Type	Valid from rev. no.
SAX31.00	..K
SAX31.03	..K
SAX61.03	..H
SAX61.03/MO	..C
SAX81.00	..H
SAX81.03	..H

Issued by
Siemens Switzerland Ltd
Smart Infrastructure
Global Headquarters
Theilerstrasse 1a
CH-6300 Zug
+41 58 724 2424
www.siemens.com/buildingtechnologies

© Siemens 2011
Technical specifications and availability subject to change without notice.

Document ID CE1N4501en

Edition 2025-08-13