DEHN + SÖHNE

UNI Earthing Clamps

for incorporating the mounting systems e.g. of PV systems into the functional equipotential bonding/functional earthing and lightning equipotential bonding

Technical data to part no.: 540 250

with hammer-head bolt M8 and lock nut

Clamp material	StSt
Clamping range Rd	8-10 mm
Connection (solid/stranded)	4-50 mm^2
Type of screw	hammer-head bolt M8x30 mm
Screw/nut material	StSt

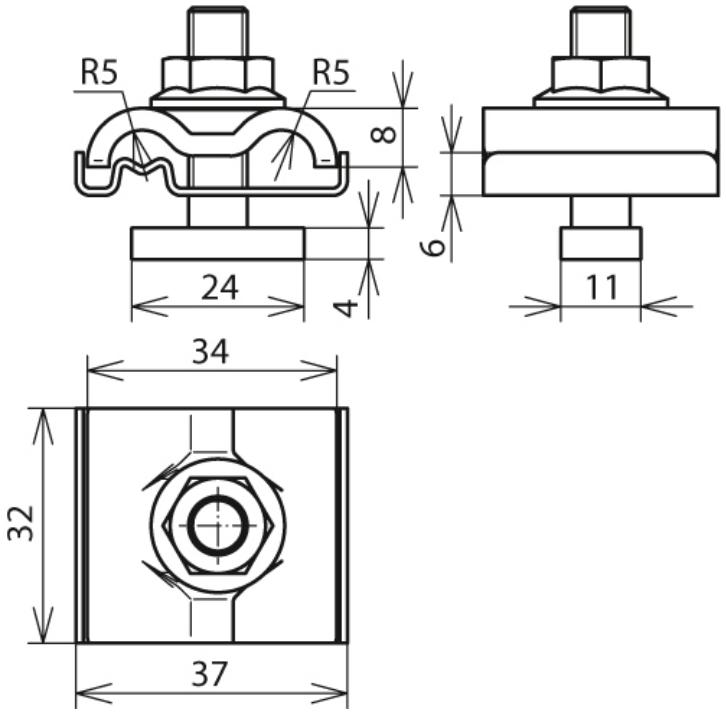

Ordering information

Type	Part No.	Packing unit
UNI Earthing Clamps	540 250	50 pcs

We reserve the right to modify design, technology, dimensions, weights and materials according to technical progress. Illustrations are non-binding. Pictures may differ from the modules described.